SOLETTA
RAUSFALLSCHUTZ 2 × KURZ

MONTAGEANLEITUNG

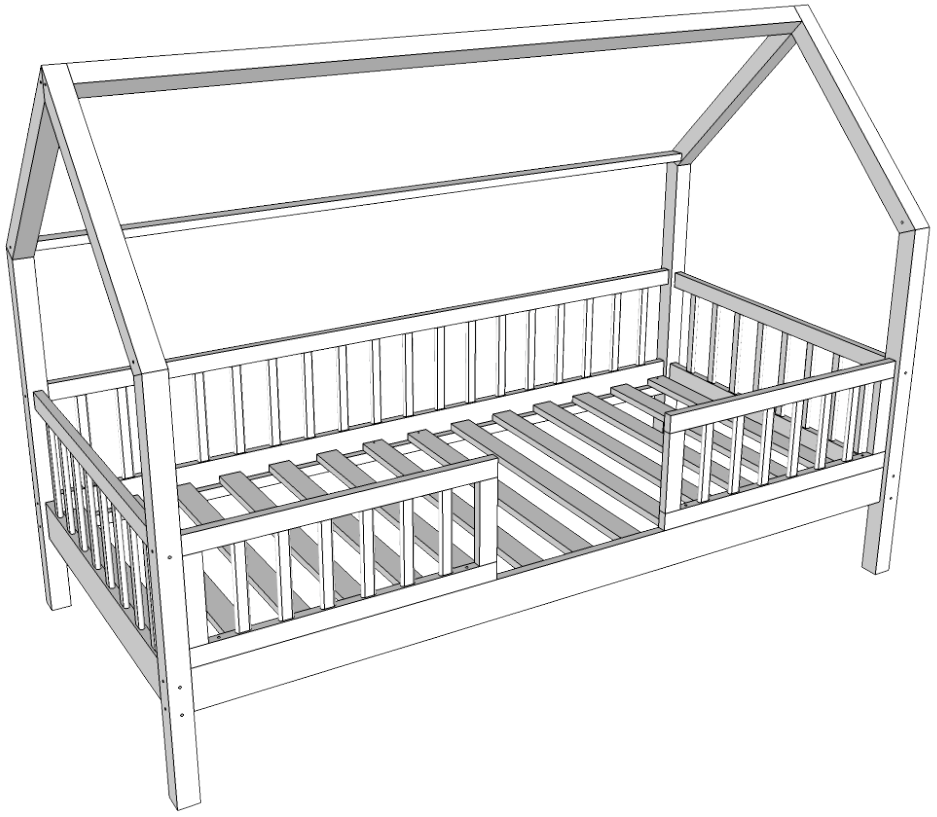

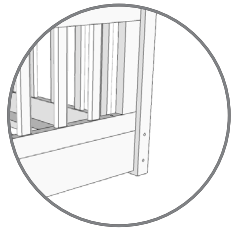



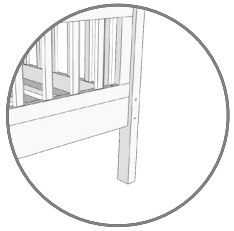

G8  6,4x80mm **32x**	S4  3,5x40mm **8x**	E1  8x45mm **6x**
K2  **1x**		

1 x 4 **2** x 2 **3** x 1 **4** x 1 **5** x 2 **6** x 1 **7** x 4 **8** x 1 **9** x 1

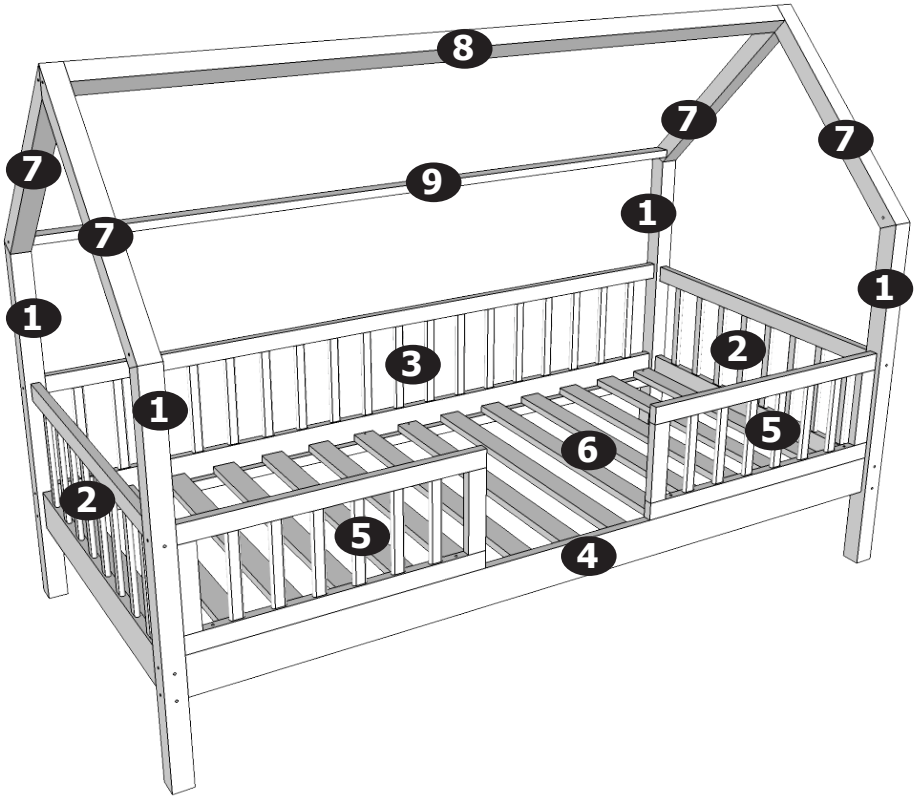

3

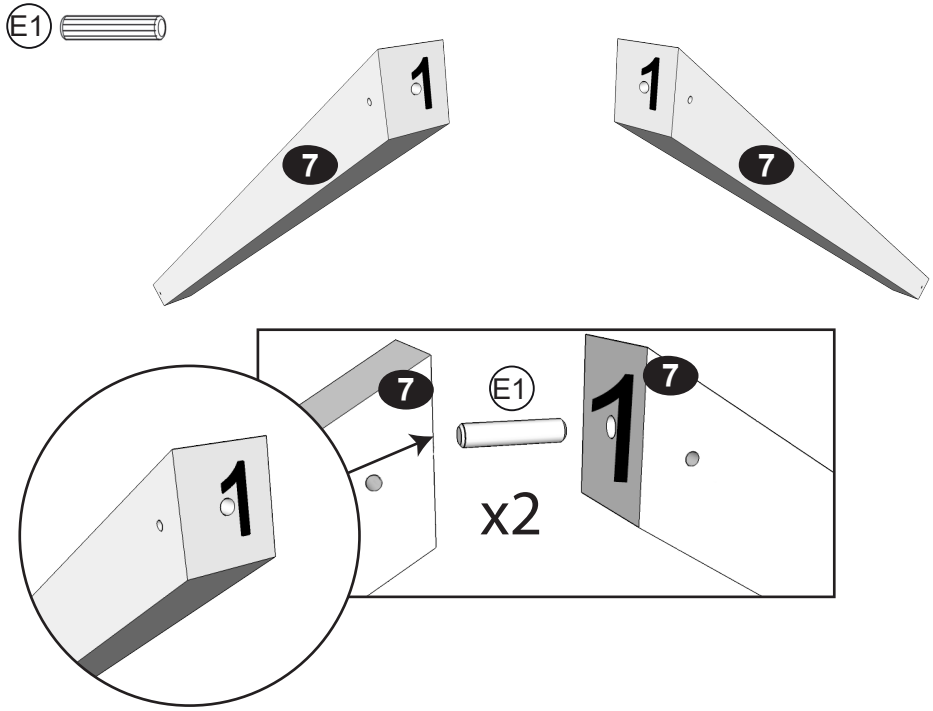
E1
1
7
1
7
1
7
E1
7
1
x2

4

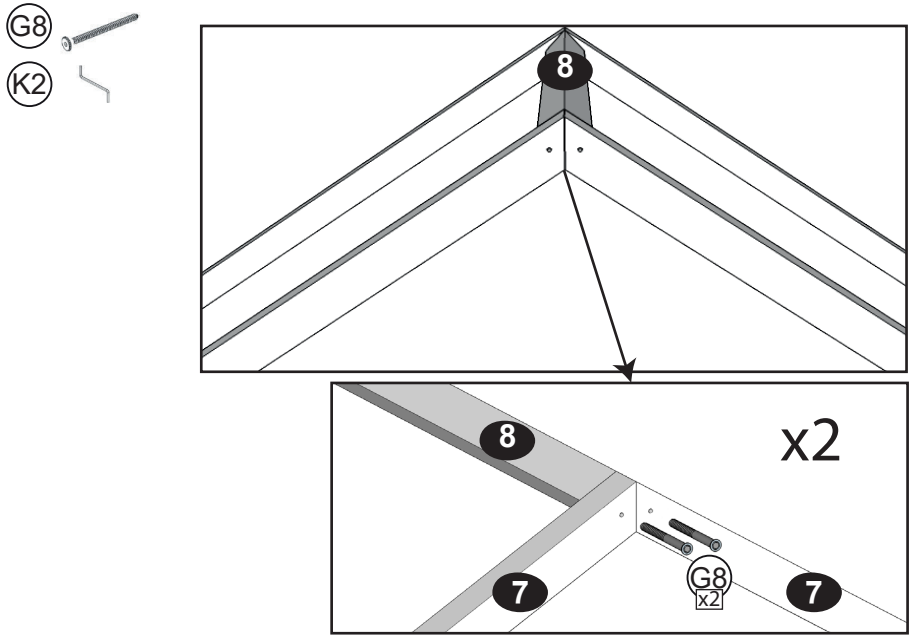
G8
K2
8
8
x2
7
G8
x2
7

5

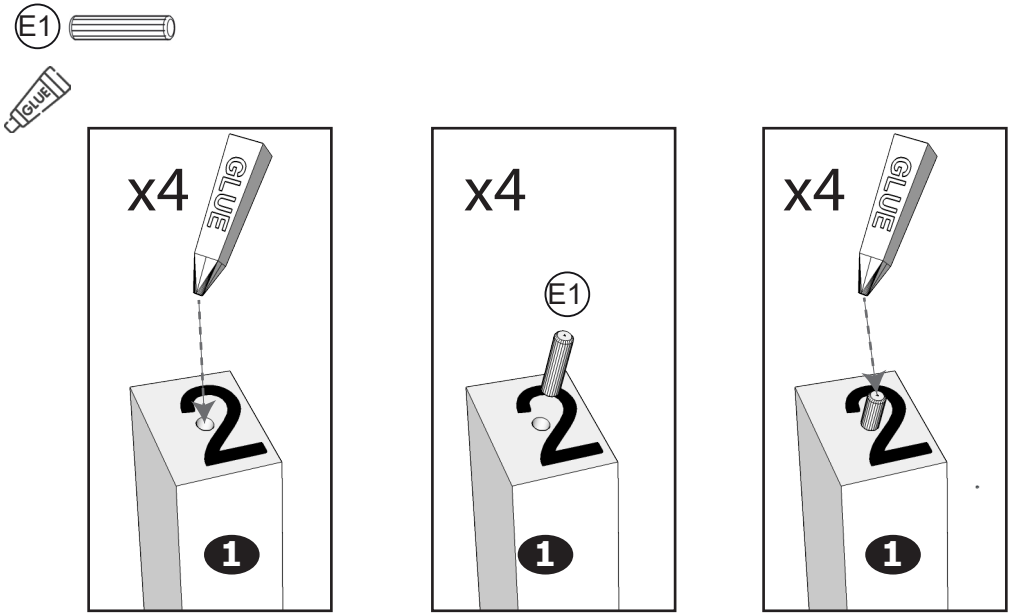
E1
GLUE
x4
GLUE
2
1
x4
E1
2
1
x4
GLUE
2
1

6

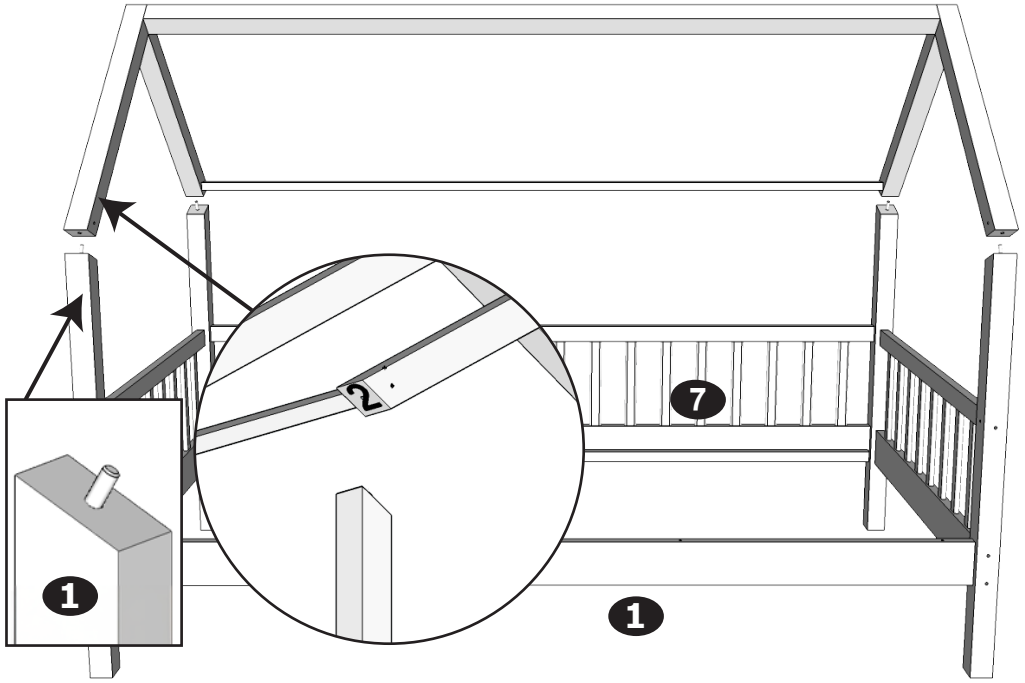
2
7
1
1

7

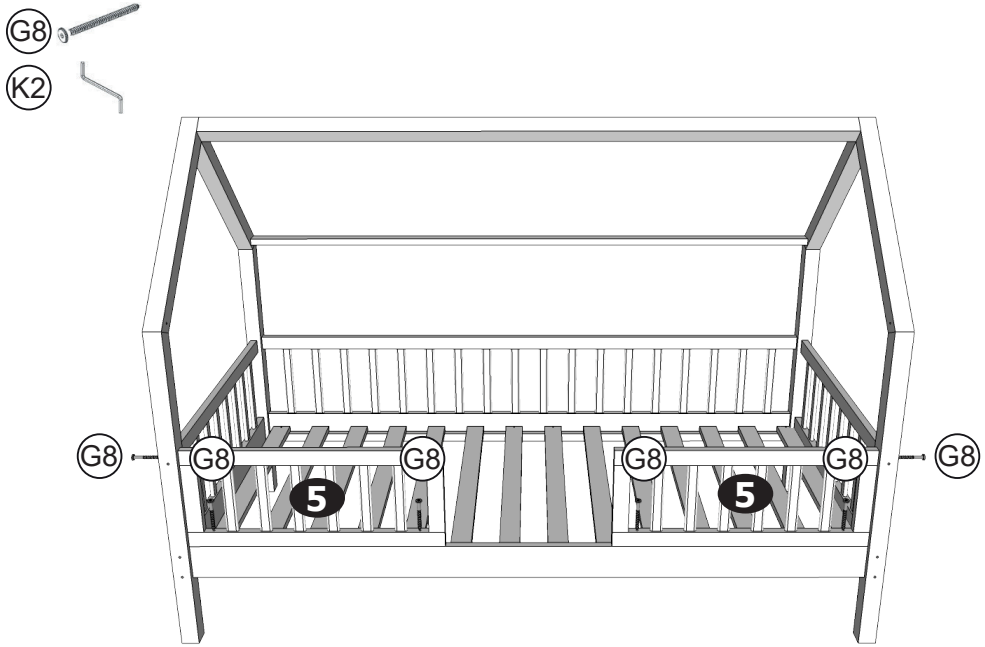
G8
K2
G8
G8
G8
G8
G8
G8
5
5

1

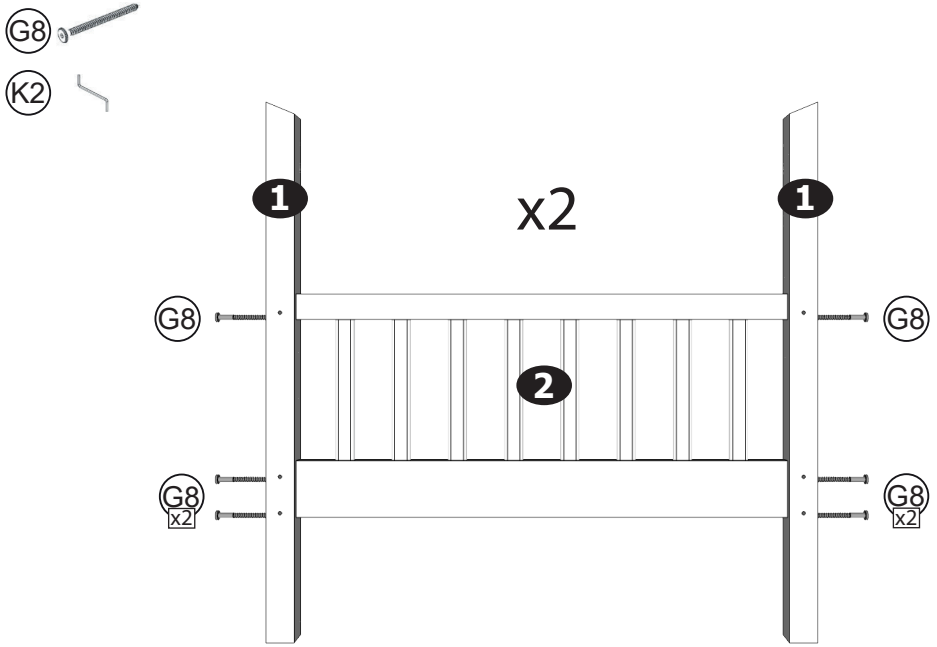
G8
K2
1
x2
1
G8
G8
2
G8
x2
G8
x2

8

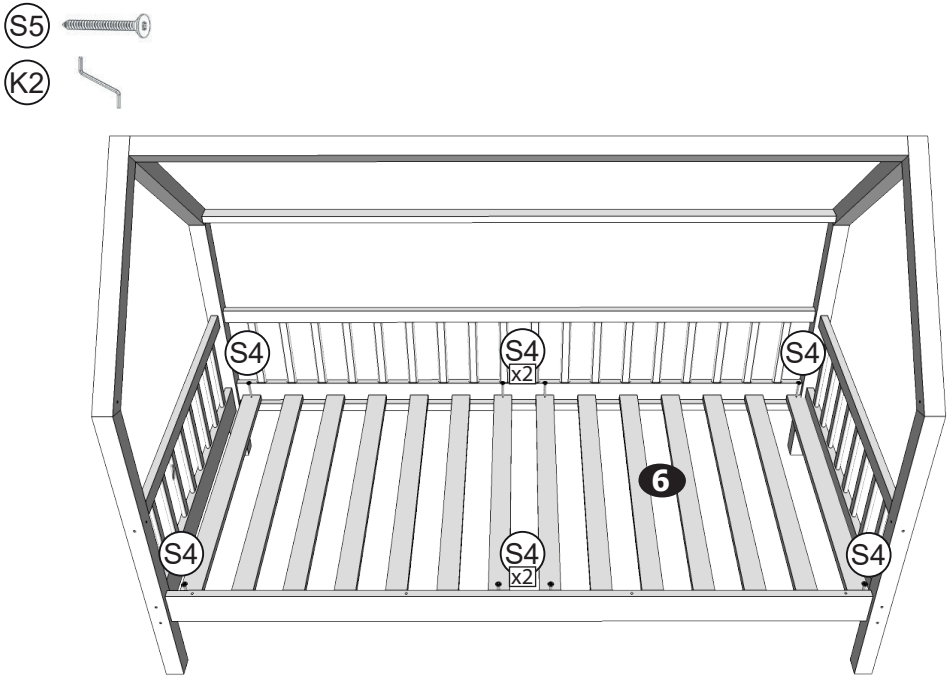
S5
K2
S4
S4
x2
S4
6
S4
S4
x2
S4

2

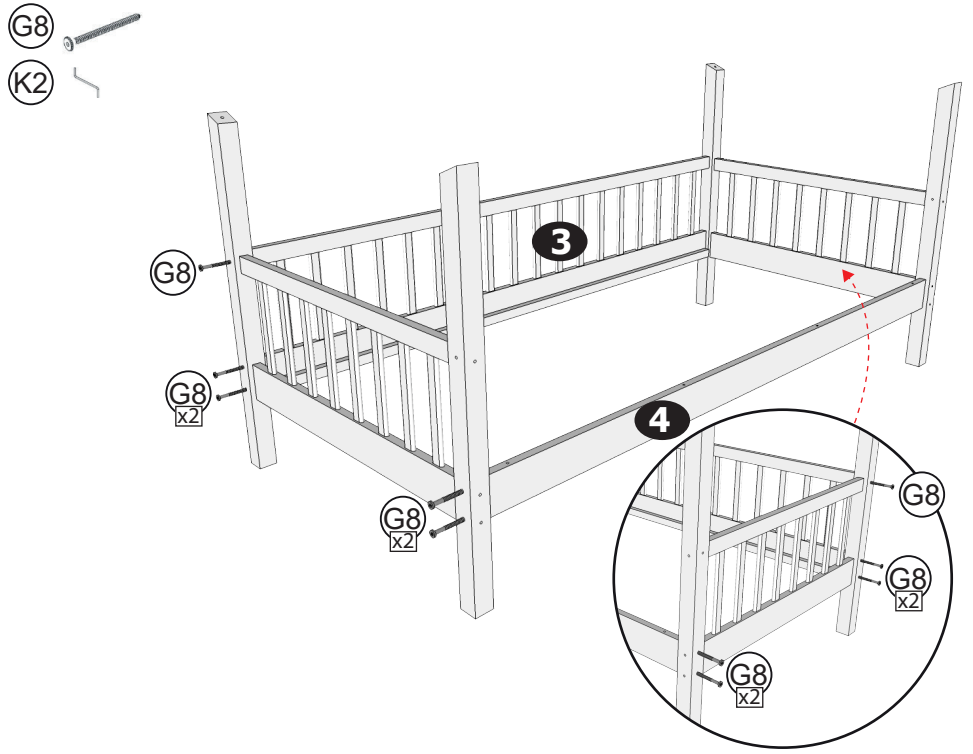
G8
K2
3
G8
G8
x2
4
G8
x2
G8
G8
x2
G8
x2